SPECIFICATION SHEET

Broadway 1500mm Mirror

Newtech Code: 8872

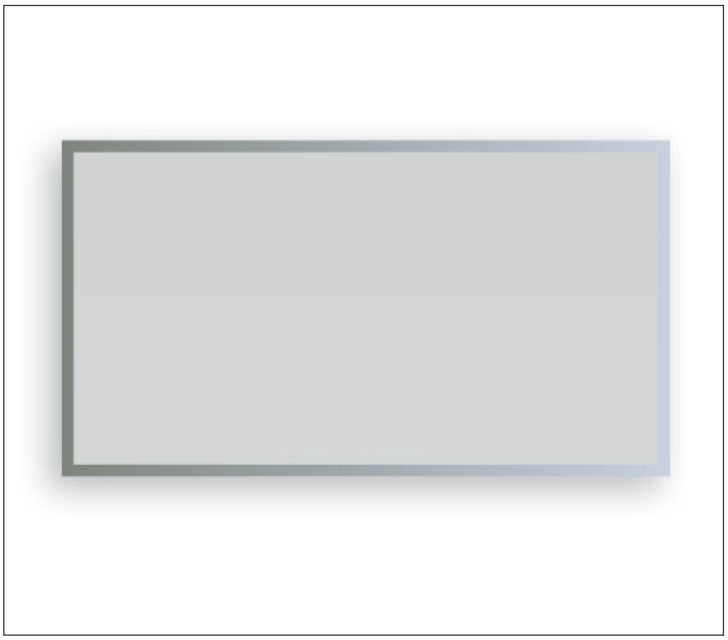

Features

- LED lighting with Touchless Sensor Switch
- Demister
- Dimensions: H700 x W1500 x D43
- LED Watts: 30.42W
- LED Modules: 507
- Equivalent to: 70W/Incandescent
  Lumens: 2585LM
- 5mm Mirror Glass

Specification / Compliance

- Safety Film Vinyl Backing
- Plexi Glass Frame Enclosing
- IP44 Rating

Technical Details

Note: This product must be installed with a minimum distance of 150mm between the infrared sensor and an adjacent countertop or obstruction to ensure correct function of the sensor. The IR sensor will not function correctly without this clearance.

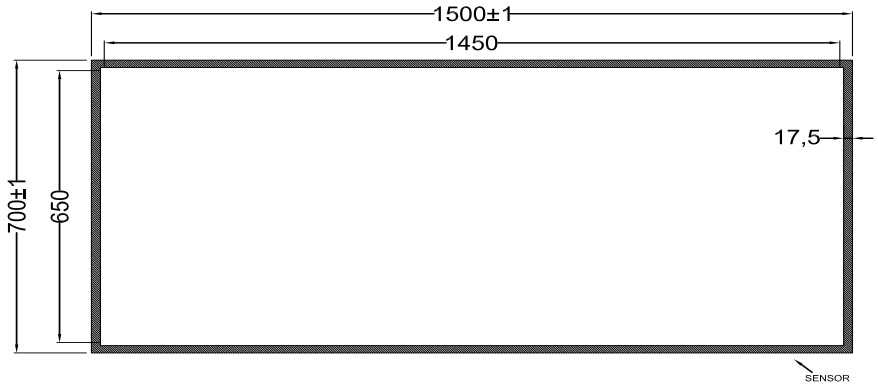

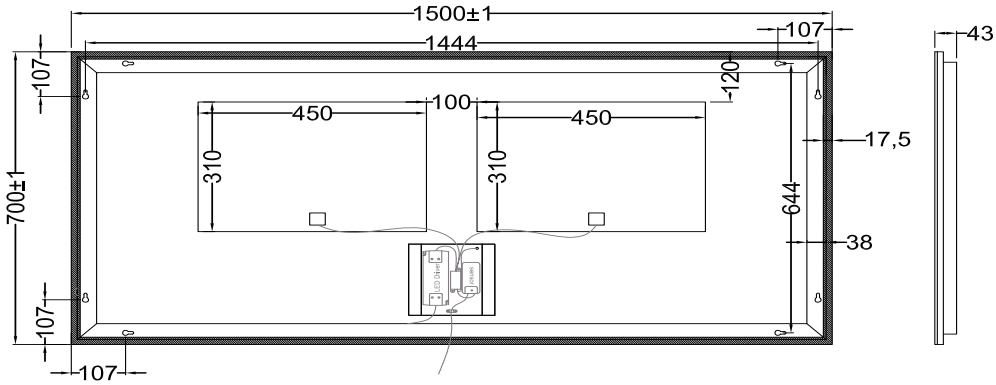

newtech
BATHROOMWARE DESIGN ■ INNOVATION

Head Office: 281 Heads Road, Wanganui
Auckland Office: 525 Great South Road, Penrose, Auckland
06 349 0194 | 0800 728 662
www.newtech.co.nz