ASTRO II TWIN RAIL SHOWER

188900 | Chrome
188907 | Matte Black
188901 | Brushed Nickel
188906 | Brushed Brass
188909 | Gun Metal

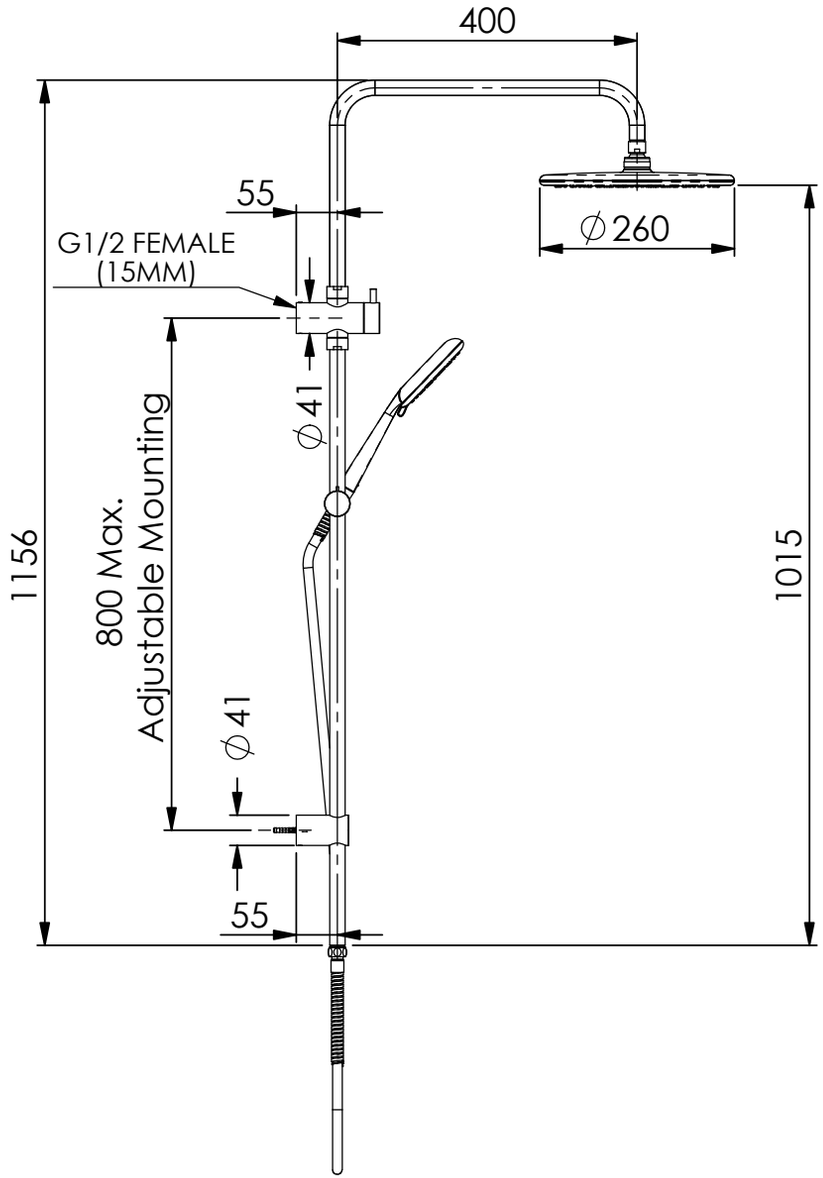

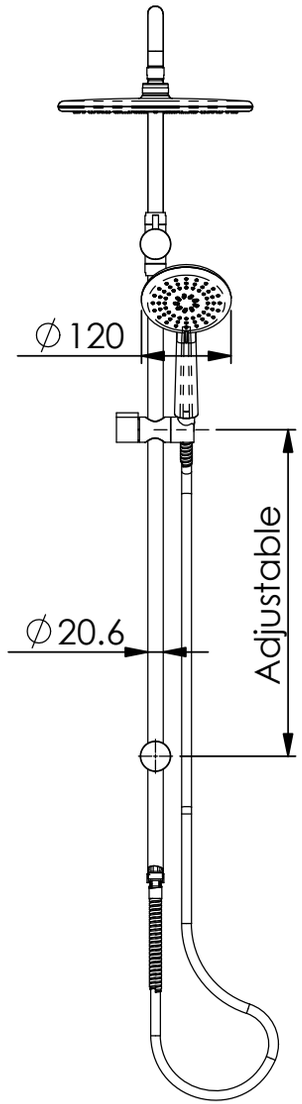

NZ: 0800 655 455 | nzsales@greenstapware.com

GREENS
where life meets water