SPECIFICATION SHEET

CATALANO
THE ESSENCE OF CERAMICS

CANOVA ROYAL 75 BASIN & PEDESTAL
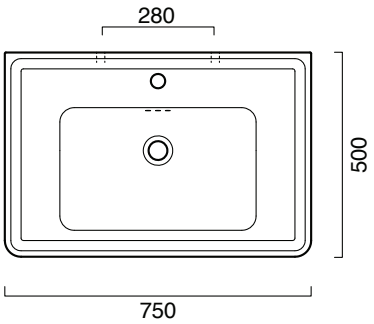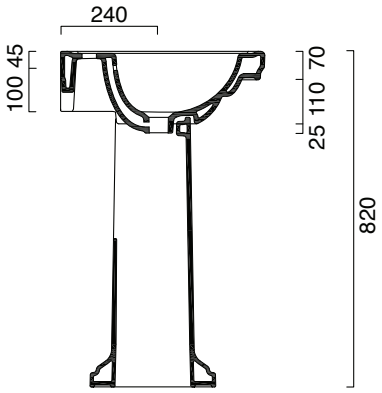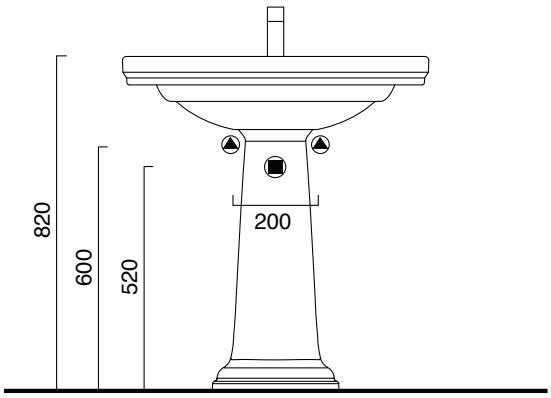
75CV.COCV