Oblio

Basin Mixer

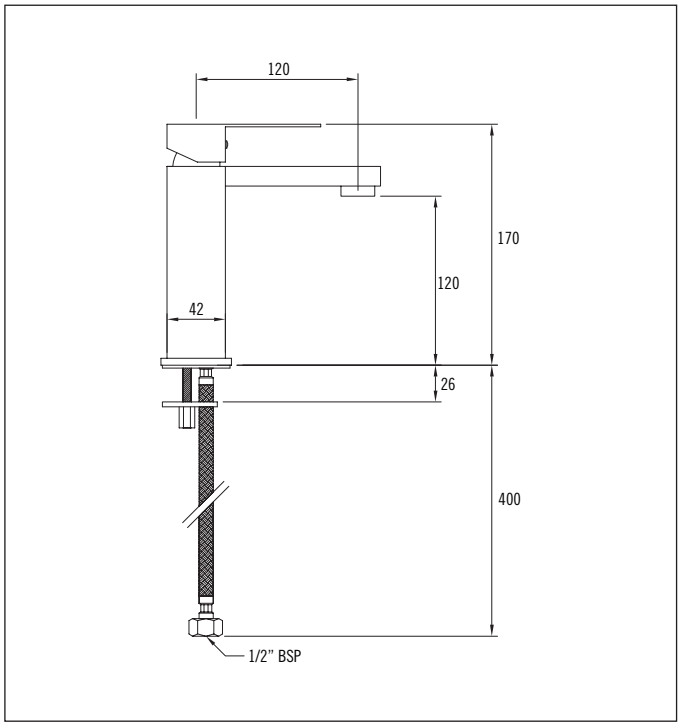

Code: OB BASM
Finish: Chrome
Spout: Fixed

Supplied with Aerator

Stainless Steel Inlet Hoses:

Hot:	I/D: 5mm	Size: Length:	M10 x 1/2" BSP 400mm
Cold:	I/D: 5mm	Size: Length:	M10 x 1/2" BSP 400mm

Metal Base supplied with flat sealing washer

Mounting Hardware:	Studs: Nut: Horseshoe Washer	2 x 6mm 10mm
Installation Hole Diameter:	Minimum: Maximum: Recommended:	32mm 38mm 34mm
Cartridge:	Mondo 35K Plus	Raised base

Mains pressure only

Recommended Pressure Operational Range:
Minimum: 150 kPa
Recommended: 600 kPa
Never to Exceed: 1000 kPa

Maximum Operating Temperature: 70°C

Aquatica Warranty

Aquatica NZ Limited offer, from the date of purchase, a 2 year warranty on handshowers, a 5 year warranty on tapware and accessories and a lifetime warranty on stainless steel sinks.

Aquatica NZ Limited warrants that only high quality workmanship and materials have been employed in the manufacture of its tapware, accessories and stainless steel products. If any faulty workmanship or materials is proven during the warranty period, Aquatica NZ Limited will at its own cost repair, or at its option replace, the faulty product. The guarantee is non-transferable and proof of purchase is required.

The use of spray or abrasive cleaners of any kind will void the warranty. (Tapware should only be cleaned with a mild detergent and a soft damp cloth).

Failure to use an in-line strainer or filter on lines to tapware incorporating a ceramic cartridge or ceramic disc mechanism may also void the warranty.

Every effort has been made to show the products as they will be sold, however, all models and specifications are subject to change without notice.

Aquatica NZ Limited
9 Saunders Place,
Avondale, Auckland.
Tel: 09-828 2068,
Fax: 09-828 2069
Email: info@aquatica.co.nz
or visit our website:
www.aquatica.co.nz